NOTE:
TYPICAL FOR 12.8m ROAD AND SHOWN AS A GUIDE ONLY. DESIGN IS REQUIRED TO BE APPROVED BY COUNCIL.

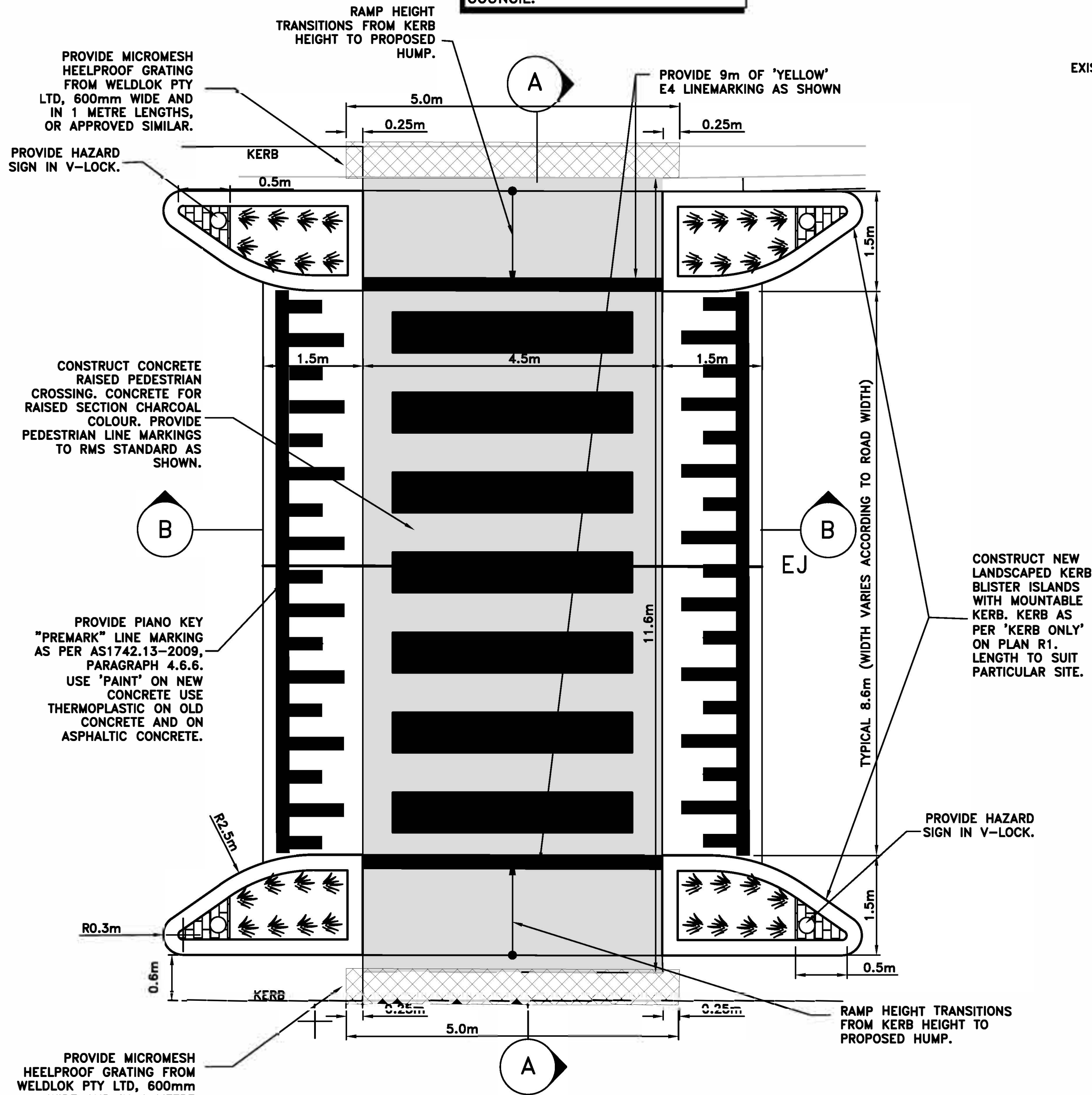

RAISED CROSSING

SCALE 1:100

E.J. = EXPANSION JOINT

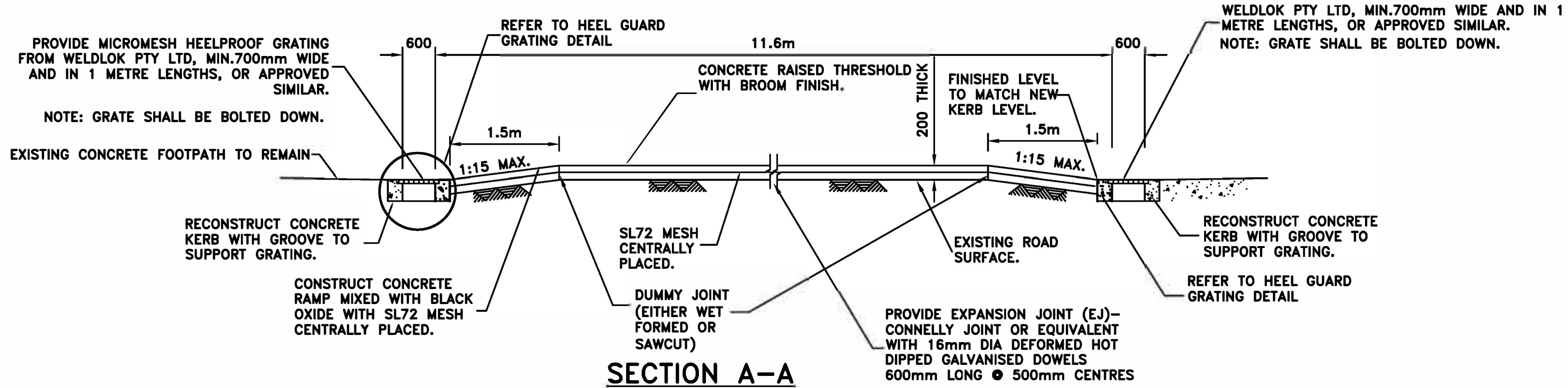

SECTION A–A

NOT TO SCALE

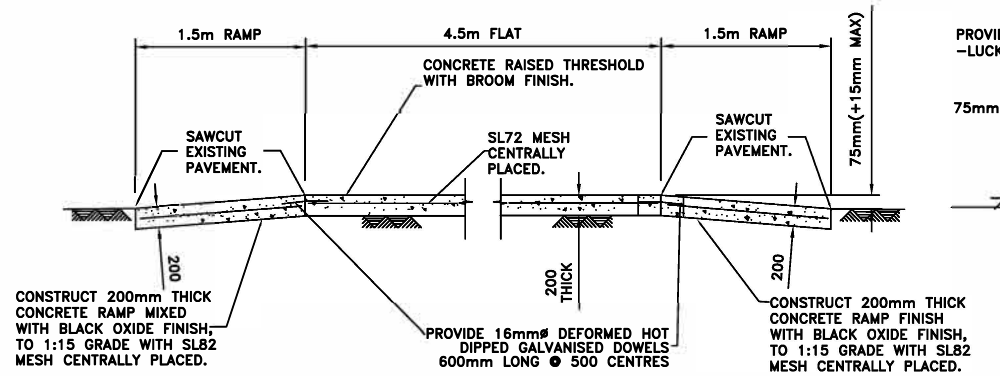

SECTION B–B

NOT TO SCALE

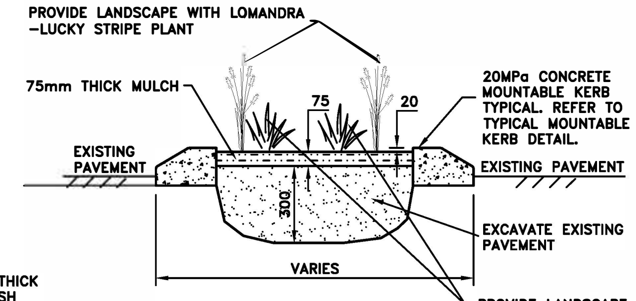

TYPICAL LANDSCAPED KERB BLISTER DETAIL

SCALE 1:20

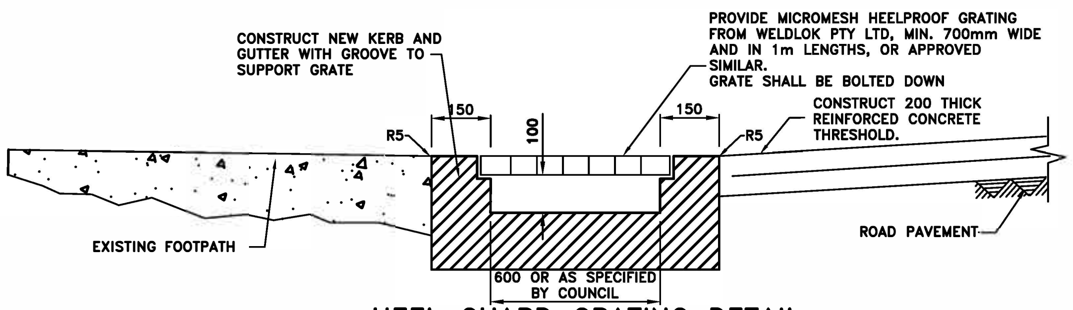

HEEL GUARD GRATING DETAIL

SCALE 1:20

(ORIGINAL = A3 SHEET)

TRAFFIC NOTES 1:

1. **CONCRETE STRENGTH**
   - A) KERB, KERB & GUTTER, FOOTPATH, CYCLEWAY, VEHICLE CROSSING, PRAM RAMP, EDGE STRIP: 25MPA @ 28 DAYS
   - B) DISH CROSSING, ROAD PLATFORM/HUMP, ROAD SLAB: 40MPA @ 28 DAYS
   - C) FOR TRAFFICKED AREAS WHERE FACILITY MUST BE OPEN TO TRAFFIC WITHIN 12 HOURS (EG VEHICLE CROSSING, ROAD SLAB, DISH CROSSING, ROAD PLATFORM/HUMP: 40 MPA WITH ACCELERATOR SUCH AS 2% CACL (REFER TO SP40HC).
2. **CONCRETE FINISH**
   - A) KERB, GUTTER, LAYBACK, DISH CROSSING, PIT (OUTER EXPOSED) – STEEL TROWEL
   - B) VEHICLE CROSSINGS, FOOTPATH, CYCLEWAY, ROAD SLABS, PRAM RAMP, ROAD HUMPS/RAMPS – BROOM/BRUSH.
3. **REINFORCEMENT**
   - A) TO AS 4671
   - B) MINIMUM COVER: 50MM
4. **JOINTING, MINIMUM DIMENSIONS, AND REINFORCEMENT CONCRETE ROAD SLABS**
   - A) ANY RECONSTRUCTED SECTION OF CONCRETE SHALL HAVE A MINIMUM DIMENSION OF 900MM IN ANY DIRECTION.
   - B) ALL JOINTS SHALL BE AT RIGHT ANGLES UNLESS DIRECTED OTHERWISE BY THE COUNCIL ENGINEER.
   - C) EXPANSION JOINTS – REFER TO NOTES ON R3 STANDARD DRAWING.
   - D) ALL DOWELS SHALL BE PERFECTLY ALIGNED IN PLAN VIEW AND IN ELEVATION, IE THE DOWELS SHALL NOT BE SPLAYED RELEVANT TO EACH OTHER.
   - E) ALL EXPANSION JOINT MATERIAL SHALL BE THE SAME THICKNESS OF THE CONCRETE AND BE IN ONE LENGTH & WIDTH.
   - F) AT ALL EXPANSION JOINTS, ANY 'SPILL' CONCRETE FROM THE PREVIOUS POUR (IE SEPARATE TO THE FINISHED CONCRETE) SHALL BE REMOVED.
   - G) CONTRACTION/DUMMY JOINTS (UNREINFORCED CONCRETE) – NOMINALLY AT 3M INTERVALS OR EQUALLY BETWEEN EXPANSION JOINTS BUT NOT LESS THAN THE CONCRETE WIDTH BETWEEN JOINTS/EDGES.
5. **EXCAVATION**
   - A) AT ALL JOINS TO EXISTING CONCRETE/ASPHALT – THE JOIN SHALL BE SAW CUT BEFORE EXCAVATION.
   - B) ALL EXCAVATED MATERIAL SHALL BE REMOVED FROM THE SITE AND DISPOSED OF AT A LICENSED WASTE DISPOSAL FACILITY.
6. **ROAD BASE**
   - A) COMPACTION: 95% STANDARD.
   - B) RECYCLED DGB SPECIFICATION: FOR SUPPLY OF RECYCLED MATERIAL FOR PAVEMENTS, EARTHWORKS, AND DRAINAGE REFER TO SPECIFICATION FOR SUPPLY OF RECYCLED MATERIAL FOR PAVEMENTS, EARTHWORKS AND DRAINAGE' BY IPWEA (NSW) (LATEST EDITION).
7. **RESTORATION OF ADJOINING ROAD PAVEMENT**
   - A) SHALL BE CARRIED OUT WITH FULL DEPTH AC20 AND AC10, WITH THE SURFACE FINISH BEING WITH AC10 (MINIMUM THICKNESS 30MM).
   - B) AC SHALL CONFORM TO RMS SPECIFICATION R116 – 'ASPHALT (DENSE AND OPEN GRADED)'.
8. **UTILITIES, SERVICES & SURVEY MARKS**
   - A) ALL UNDERGROUND UTILITY SERVICES SHALL BE CHECKED FOR LEVEL AND LOCATION PRIOR TO COMMENCEMENT OF WORKS, BY THE CONTRACTOR.
   - B) ALL SERVICE COVERS AFFECTED BY THE WORKS SHALL BE ADJUSTED AS REQUIRED AND TO SUIT THE LEVELS OF THE NEW WORK. NO SERVICE FITTINGS SHALL BE COVERED.
   - C) PROPERTY STORMWATER PIPES: WHERE AFFECTED, SHALL BE REPLACED WITH 90MM UPVC OR TO SUIT EXISTING AND INVERT SHALL MATCH THE GUTTER LEVEL.
   - D) STATE SURVEY MARKS (SSM'S) – SHALL NOT BE DISTURBED UNLESS APPROVED BY THE COUNCIL ENGINEER.
   - E) AT ALL LIGHT/POWER POLES, THE CONCRETE SHALL BE ENDED 150MM CLEAR OF THE POLE AND THE GAP FILLED WITH 30MM OF 10MM COLDMIX/ASPHALTIC CONCRETE.
9. **EXISTING SIGNAGE**
   - A) SUCH SIGNAGE SHALL BE REINSTATED UNLESS THE COUNCIL ENGINEER ADVISES OTHERWISE.
   - B) SIGNS REPLACED OR NEW, WITHIN THE NEW CONCRETE SHALL BE INSTALLED WITH A V-LOK.
   - C) HERITAGE STREET NAME SIGNS EMBEDDED IN FOOTPATH PAVING AND KERBS – CAUTION SHALL BE EXERCISED TO NOT DAMAGE THESE SIGNS AND THE CONTRACTOR SHALL LIAISE WITH THE COUNCIL ENGINEER TO DETERMINE WHAT ACTION TO IMPLEMENT WHERE DISTURBANCE OF THE SIGN IS ESSENTIAL.
10. **RESIDENT NOTIFICATION**
    - A) ALL RESIDENTS AFFECTED BY THE WORKS SHALL BE NOTIFIED AT LEAST 2 WORKING DAYS BEFORE THE RELEVANT WORK COMMENCES AND ANY REASONABLE REQUESTS ACCOMMODATED.
11. **SAFETY/SIGNAGE/ACCESS**
    - A) DURING CONSTRUCTION, ADEQUATE WARNING SIGNS AND BARRICADING SHALL BE PROVIDED TO ENSURE THAT THE WORK SITE MEETS THE REQUIREMENTS OF AS 1742.2 & 1743.3, AND TO PROVIDE ADEQUATE PROTECTION TO PEDESTRIANS & MOTORISTS.
    - B) ADEQUATE AND SAFE ACCESS FOR PEDESTRIANS SHALL BE PROVIDED AT ALL TIMES.
    - C) AT DRIVEWAYS – PREVENTION OF ACCESS SHALL BE KEPT TO AN ABSOLUTE MINIMUM AND ARRANGEMENTS SHALL BE MADE WITH THE RESIDENT/BUSINESS, BY THE CONTRACTOR, FOR A SUITABLE DAY/TIME FOR THIS WORK. USE OF HIGHER STRENGTH CONCRETE, WITH SHORTER CURING TIME MAY BE NECESSARY.
12. **DIMENSIONS**
    - A) ALL DIMENSIONS ARE IN MILLIMETERS UNLESS SHOWN OTHERWISE.
13. **GENERAL**
    - A) ALL WORKS SHALL BE CARRIED OUT TO COUNCIL'S SPECIFICATION, TO BEST PRACTICE STANDARDS, AND TO THE SATISFACTION OF COUNCIL'S SUPERVISING ENGINEER.
    - B) DURING AND AFTER EXCAVATION, ANY UNSOUND AREAS BELOW THE CONCRETE WORK SHALL BE DRAWN TO THE COUNCIL ENGINEER'S ATTENTION, TO ESTABLISH IF ANY ADDITIONAL EXCAVATION/ BASE COURSE IS NECESSARY.
    - C) THE WORK SITE SHALL BE KEPT IN A CLEAN, TIDY, AND SAFE CONDITION AT ALL TIMES AND TO THE SATISFACTION OF COUNCIL'S ENGINEER.
14. **DOCUMENT PRIORITY**
    - A) THIS PLAN SUPERSEDES ANY STATEMENTS ON OTHER DOCUMENTS, EG SPECIFICATIONS, OTHER PLANS, ETC, UNLESS ADVISED BY THE COUNCIL ENGINEER.
15. **INSPECTIONS**

    INSPECTIONS BY THE COUNCIL SUPERVISING ENGINEER SHALL BE REQUIRED AT THE FOLLOWING STAGES AND AS OTHERWISE DIRECTED BY THE COUNCIL ENGINEER:–
    - A) EXCAVATION COMPLETED.
    - B) FORMWORK AND REINFORCEMENT SET.
    - C) CONCRETE POURED AND CURED.
    - D) COMPLETED.

CHECKED & APPROVED	SURVEYED & DRAFTED	QUANTITIES	SERVICES AFFECTED
APPROVED FOR CONSTRUCTION	DESIGNED PG/DJT MAY 2019	INNER WEST COUNCIL	
	DRAWN PG/DJT MAY 2019		

NOTICES	DATE
S.R.A. / SURV. GEN.	
R.T.A.	
A.G.L. / SHELL PIPELINES	
SYDNEY WATER	
TELSTRA / OPTUS	
SYDNEY ELECTRICITY	
NOTICE OF ENTRY	
KERB & GUTTER	

SERVICES	
TELECOM/OPTUS	—T—T—T—T—
GAS	—G—G—G—G—
SEWER	—S—S—S—S—
WATER	—W—W—W—W—
RAILWAY	—R—R—R—R—
ELEC. CABLES	—E—E—E—E—
OIL PIPELINES	—P—P—P—P—
STORM WATER	—SW—SW—SW—

DATUM: A. H. D.

SCALES: AS SHOWN

AMEND	DATE	DESCRIPTION	APPROV.

INNER WEST COUNCIL

STANDARD TRAFFIC DRAWING – T1

PEDESTRIAN CROSSING ON FLAT TOP SPEED HUMP

FILE NO.	SHEET NO.

PLAN NO. T1

VERSION V1